General

The S-100 CO_2 module is the world smallest sensor and can be integrated into wide range of application product from small wall-pads to building ventilation controller. Its main application area is Indoor Air Quality, HVAC, Stove, Air-conditioner, Vehicle drowsiness, Gas equipment.

Carbon Dioxide (CO_2) Module

Model : S-100

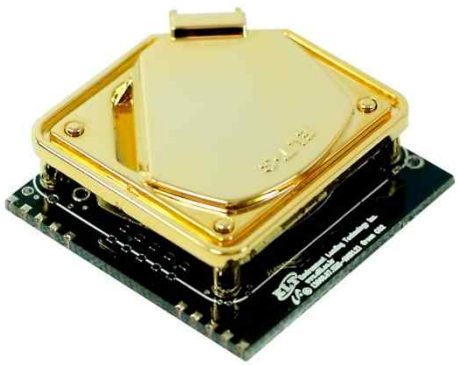

Features

- Pre-calibrated
- Low profile 2mm pitch header
  4 pin (power), 10 pin (I/O) connection
- The world smallest size
- Three available outputs: AVO, TTL UART, I2C
- Non-Dispersive Infrared (NDIR) technology used to measure CO_2 levels.
- Provides output signal proportional to CO_2 level.
- Model available to interact with other devices.
- Gold-plated sensor provides long-term calibration stability.

S-100

Specifications

General Performance

Operating Temperature

0 ~ 50℃

Operating Humidity

0 ~ 95% RH (Non-condensing)

Operating Environment

Residential, Commercial spaces

Storage Temperature

-30℃ ~70℃

CO_2 Measurement

Sensing Method

NDIR (Non-dispersive Infrared)

Measurement Range

0 to 5,000 ppm (expandable up to 10,000ppm)

Accuracy

±30ppm ±5% of measured value

Step Response Time (90%)

60 seconds

Sampling Interval

3 seconds

Electrical Data

Power Input

5.0V ± 0.1V

Current Consumption

Normal : 20mA

Peak : 320mA(10 ms) – 3sec period

Output Signal

UART

38,400BPS, 8bit, No parity, 1 stop bit

TTL Level Voltage 3.3~4.5V

I2C

Slave mode only

Internal pull up resister

Under 400Khz Clock

TTL Level Voltage 3.3~4.5V

Analog Voltage Output

VDC 0.5 ~ 4.5V (linear output)

Pin Description

Pin No.	Description
1/3	+5V VCC
2/4/9	GND
5	TTL RXD (MCU→S-100)
6	TTL TXD (MCU←S-100)
7	I2C SCL
8	I2C SDA
10	Analog Output (0.5~4.5V)
11/12	Reserved
13	ACDL or MCDL Control
14	Reset (Low Active)

Dimensions (unit : mm)

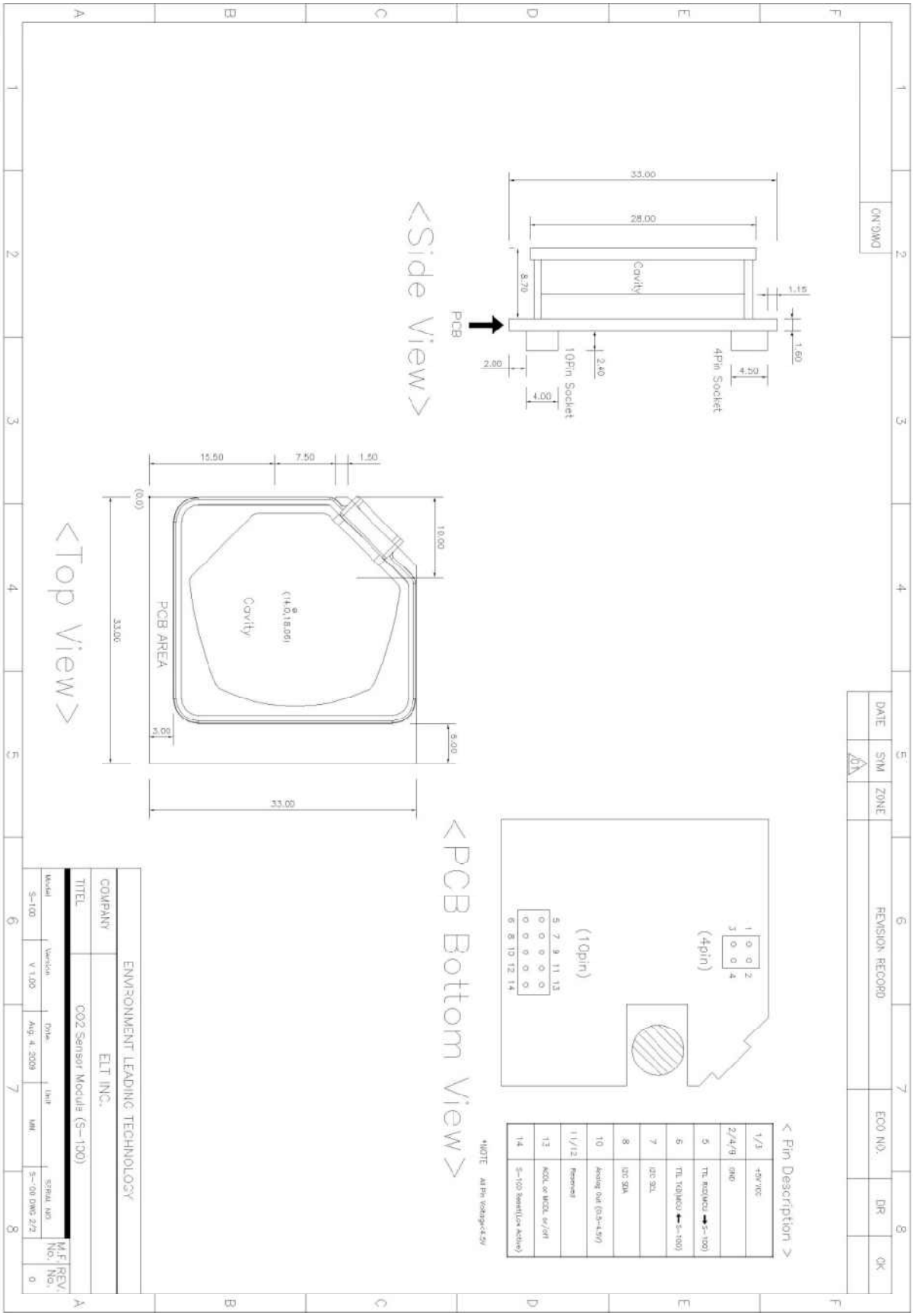

Output Descriptions

Analog Voltage Output

Output Range	0.5 ~ 4.5V (linear output)
Output Resolution	12 bits
Minimum Road(Rm)	10 KΩ

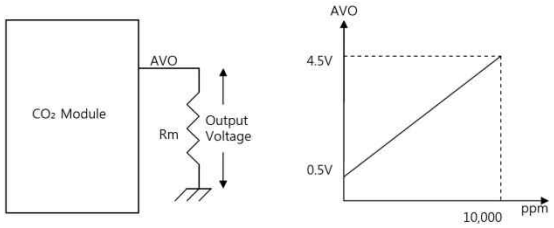

Block Diagram

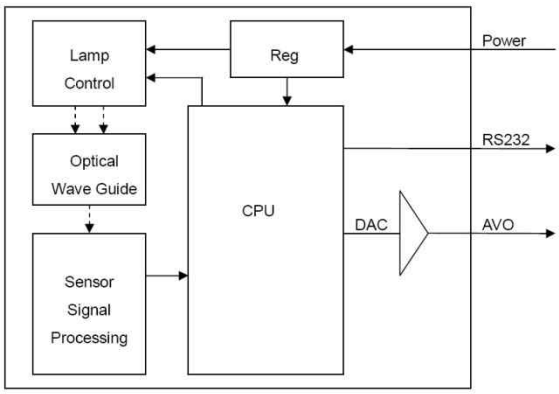

UART Protocol

Item	Description
Baud rate	38,400 BPS
Parity	No Parity
Number of Bits	8
Stop Bit	1

Data Transmit

Interval : 3 seconds

Handshake protocol : None (Data is transmitted to outer device periodically)

Data Format

B1	B2	B3	B4	BL	'p'	'p'	'm'	CR	LF

B1 ~ B4	4 byte CO2 density string
BL	Blank: 0x20
'ppm'	'ppm' string
CR	Carriage return : 0x0D
LF	Line feed : 0x0A

EX) In case 1,255 ppm,

0x31 0x32 0x35 0x35 0x20 0x70 0x70 0x6D 0x0D 0x0A

'1,255 ppm<CR><LF>'

I2C Communication

(Only Slave Mode Operation)

Internal pull up resister

Slave Address : 0x31

Slave Address Byte :

Slave Address(0x31) 7 Bit + R/W 1 Bit

Bit7	Bit6	Bit5	Bit4	Bit3	Bit2	Bit1	Bit0
0	1	1	0	0	0	1	R/W Bit

R/W Bit : Read = 1/Write = 0

When reading the data, Slave Address Byte is 0x63

When writing the data, Slave Address Byte is 0x62

Block Diagram

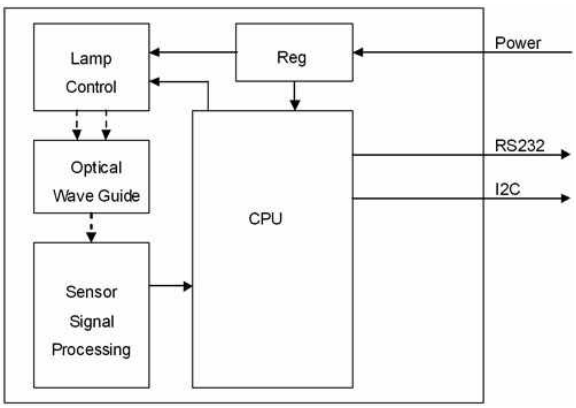

Transmission Sequence in Master

1) I2C Start Condition
2) Write Command(Slave Address + R/W Bit(0) = 0x62) Transmission and Check Acknowledge
3) Write Command(ASCII 'R' : 0x52) Transmission and Check Acknowledge
4) I2C Stop Command
5) I2C Start Command
6) Read Command(Slave Address + R/W Bit(1) = 0x63) Transmission and Check Acknowledge
7) Read 7 Byte Receiving Data from Module and Send Acknowledge
   (Delay at least 1ms for reading each byte)

Configuration	CO2	reserved	reserved	reserved	reserved
1 Byte	2 Byte	0x00	0x00	0x00	0x00

0	0	0	0	1	0	0	0